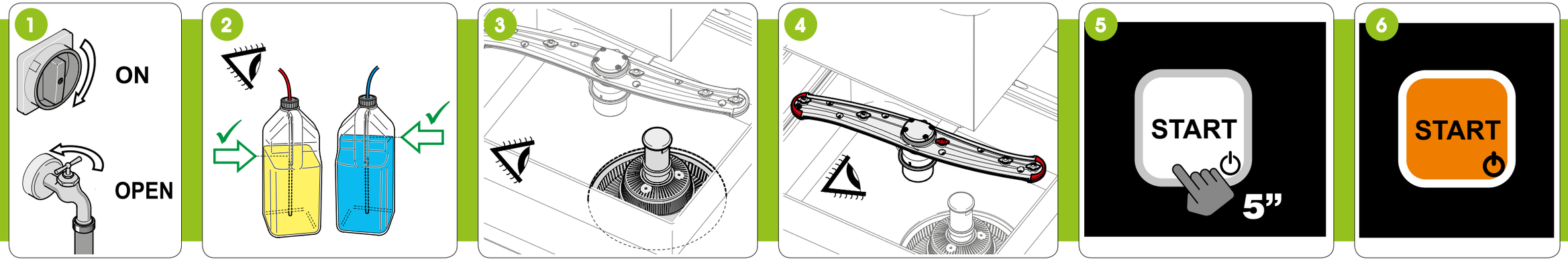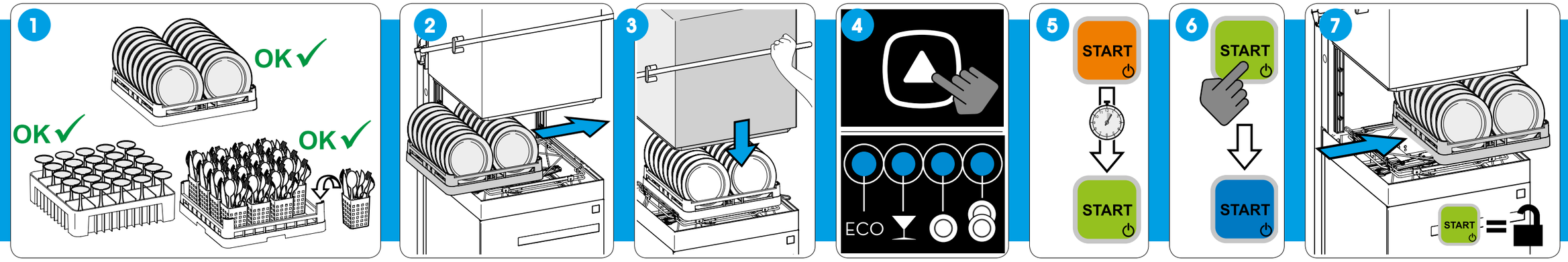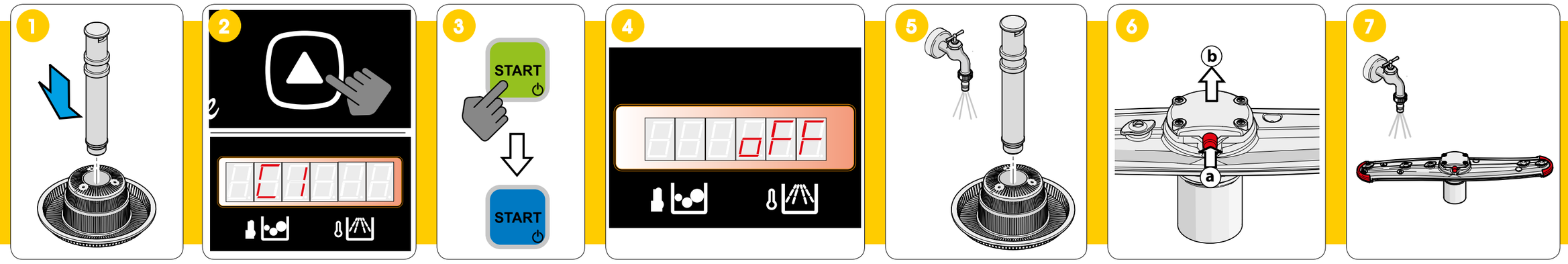COMENDA
TO CLEAN. WITH CARE.