UBERT GASTROTECHNIK GMBH
Gewerbegebiet Ost + Nord
D-46348 Raesfeld

Telefon: +49 (0) 28 65 / 602-0
Fax: +49 (0) 28 65 / 602-102
Internet: www.ubert.com
e-mail: info@ubert.com

DHTG51SS
SPECIFICATION SHEET

Name	Hot Deli Display Cabinet Gourmet Line Self Service
Dimensions [mm]	W 1752 x D 1025 x H 848
Electr. Connection (EA)	380 - 400V, 3/N, 50/60Hz, 7.71kW, fuse protection 3 x 16A (or 220 -240V, 1/N, 50/60Hz, 7.71kW)
Net Weight	183kg
Description	Case completely made of stainless steel with full glass top. Front glass with lift-up hinge, supported by gas rams; mirror-coated sliding doors. Top heat separately adjustable per GN-section. Air circulation system. Temperature controlled by thermostat. Optimized illumination by halogen lamps.
Accessories at extra cost	5 x 1/1 -100mm GN-pan; 5 x 1/3 -100mm GN-pan, Base

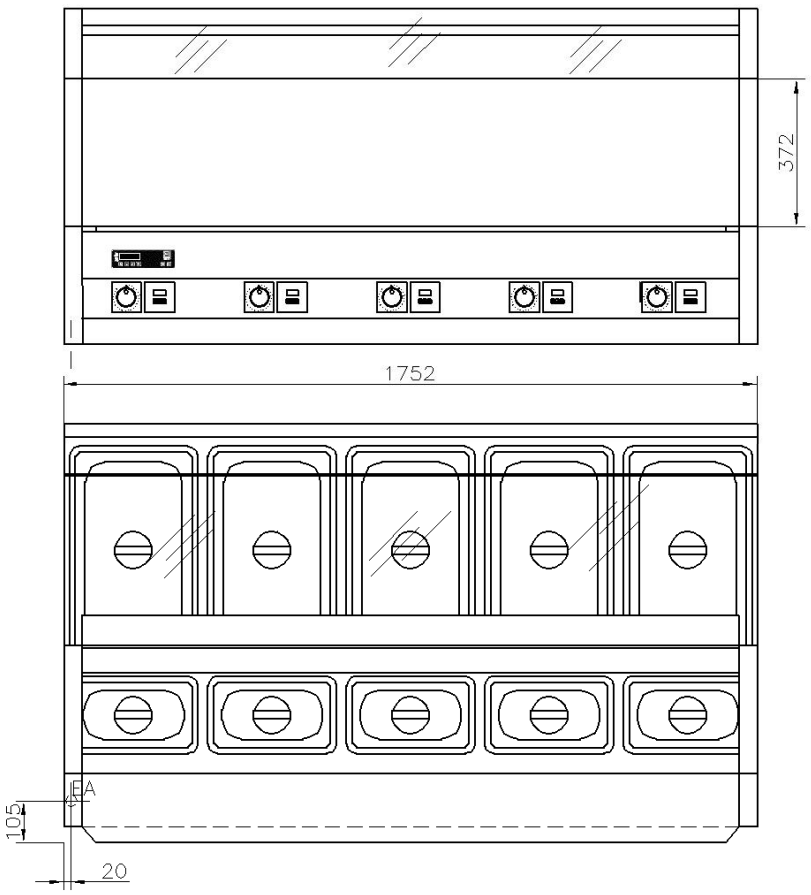

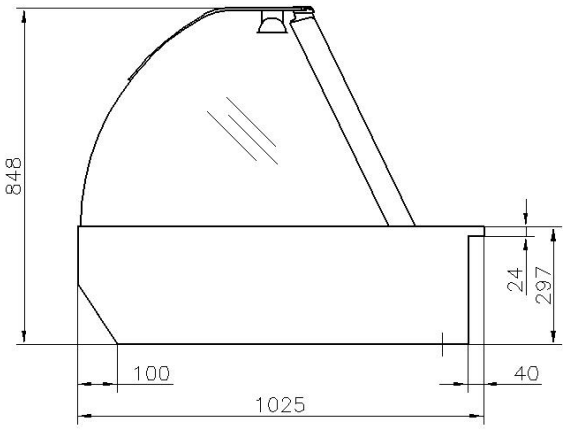

Issued: 01.01.2009
Technical changes reserved!

Manufactured by: UBERT GASTROTECHNIK GMBH
Gewerbegebiet Ost + Nord
D-46348 Raesfeld