THE FINE ART OF COOKING

# Induction appliance with power hob MS-I-10ECO, 3,5 kW

**Item no. 311681**

## Standalone devices of cooking suite quality: Power brought straight to the point

The induction power hob is designed for cooking with just one pan. It's an ideal choice wherever high power levels are required: by producing heat quickly for a short period, it's perfect for flash frying and cooking large quantities.

## Benefits that are spot on

- Energy saving increased by 50 to 85 % as compared to conventional cooking technology
- Minimum heat emission levels allow for an optimum kitchen working environment
- Extremely quick boiling times. Maxi-mum heat output is achieved within just a few seconds.
- Freely adjustable, highly precise energy metering for perfectly cooked food
- Control that's a smooth ride with patented **SLIDE**CONTROL technology
- Maximum power density per $cm^2$ at pan base
- Pan type detection (material, size, power consumption properties)
- Central pot detection and temperature monitoring
- Automatic fan monitoring
- Self-diagnosis system for error detection and signalling

**Equipment**

**SLIDE**CONTROL technology
Multi-segment digital display
Extra-strong ceramic glass
Removable grease filter
Height-adjustable feet

## 5th-generation technology

MENU SYSTEM
Induction technology

- MENU SYSTEM induction technology is the most up-to-date, highest performing and most advanced induction technology in the world.
- MENU SYSTEM leads the market, developing and producing all the components of this induction technology in-house.
- Its unique position in the field of cooking equipment construction enables the company to concentrate all its efforts on this forward-looking technology.
- No other company has more experience in the development and application of induction technology in professional kitchens.

**Menu System AG** Oberstrasse 222 CH-9014 St.Gallen info@menusystem.ch www.menusystem.ch T +41 71 272 51 00 F +41 71 272 51 10

THE FINE ART OF COOKING

**MS-I-10ECO**
**Item no. 311681**

[redacted]

## Power brought straight to the point

**Power induction hob 6 kW**
**with patented SLIDE**CONTROL **technology**

The induction power hob is designed for cooking with just one pan. It's an ideal choice wherever high power levels are required: by producing heat quickly for a short period, it's perfect for flash frying and cooking large quantities.

- Suitable for pans up to 32 cm
- Effective field ø 300 mm
- Central pot detection and temperature monitoring

## Technical data

| | |
|---|---|
| Dimension | 400 × 400 × 200 mm |
| Glass dimension | 388 × 388 mm |
| Connected load | 3,5 kW |
| | CEE16/15-CEE7/7 230V 1 Phase |
| | 50/60 Hz |
| Heat emission | latent 350 W |
| | sensible 400 W |
| Plug | CEE 16 or type 15 |
| Cable length | 2.2 m |
| Weight | 18 kg |

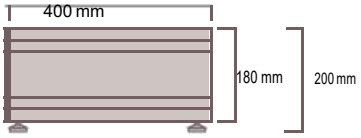


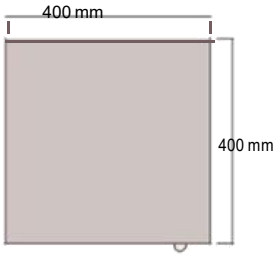


## Design

- Hob made from high-quality glass-ceramic material
- Complete housing made from solid stainless steel (Chromium nickel steel 1.4301)
- Removable, easy to clean grease filter
- Height-adjustable feet
- Continuously variable, electronic power control for highly precise energy metering
- One-handed operation using a rotary switch
- Control and power electronics resistant to power supply fluctuations

## Safety instructions

The exhaust air must be allowed to escape unobstructed. The mains plug must not be removed. The grease filters must be cleaned regularly.

The experience MENU SYSTEM has gained as the leader of the induction cooking suite market flows directly into the design and development of our standalone appliances. Accordingly, our standalone appliances provide the ideal response to the needs of professionals.

GARANTIE

**Quality guaranteed**
Our manufacturer's warranty vouches for the quality of our products. Depending on country and region, service and warranties are looked after either by MENU SYSTEM directly or by our authorised partners.

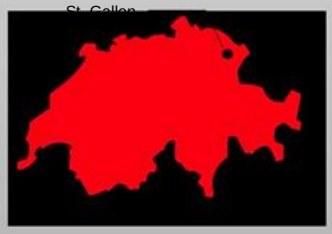

**Made in Switzerland** With MENU SYSTEM, induc-tion technology, electrical technology and metal-worked components all come from a single source. The high degree of vertical integration guarantees full control based on quality and expertise.
For MENU SYSTEM, «Made in Switzerland» isn't just a label – it's a philosophy and a living reality.

**Menu System AG** Oberstrasse 222 CH-9014 St.Gallen info@menusystem.ch www.menusystem.ch T +41 71 272 51 00 F +41 71 272 51 10

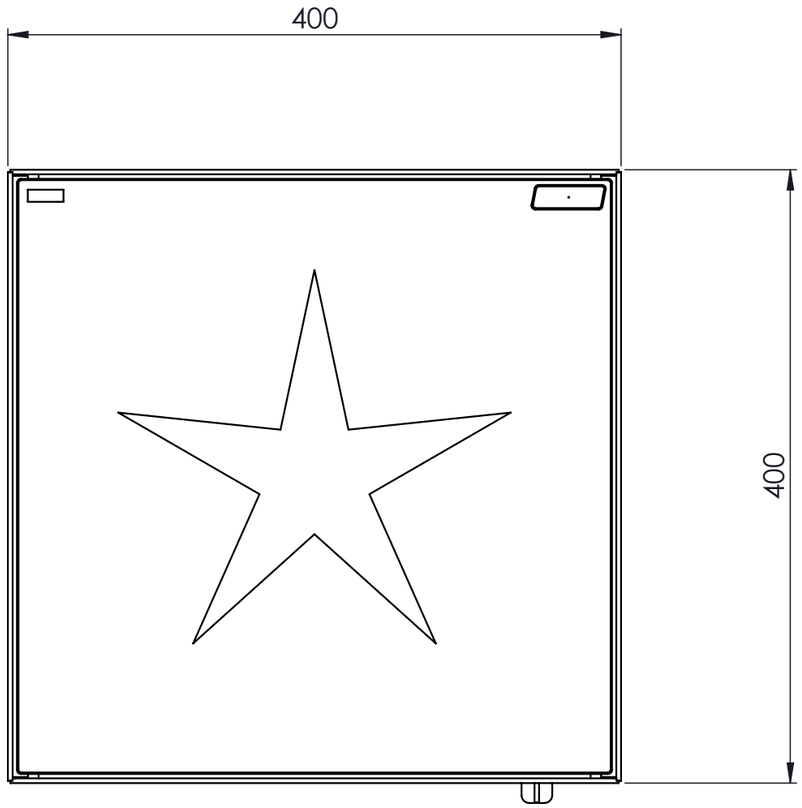


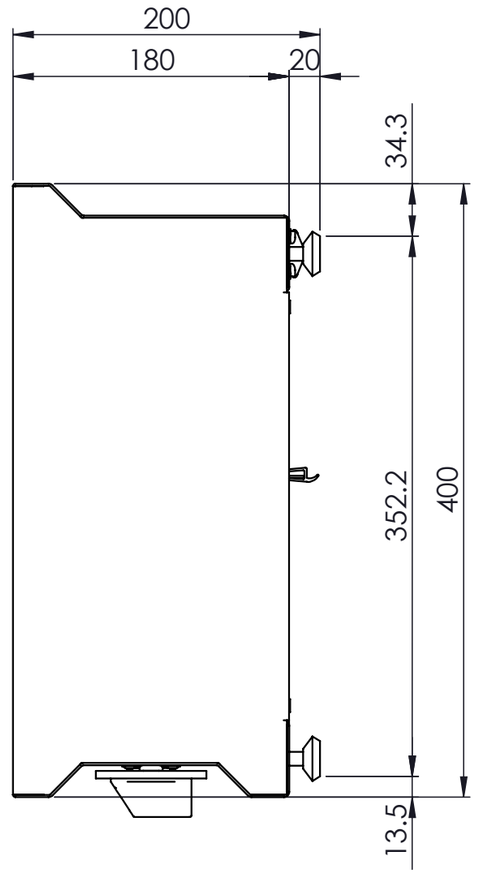


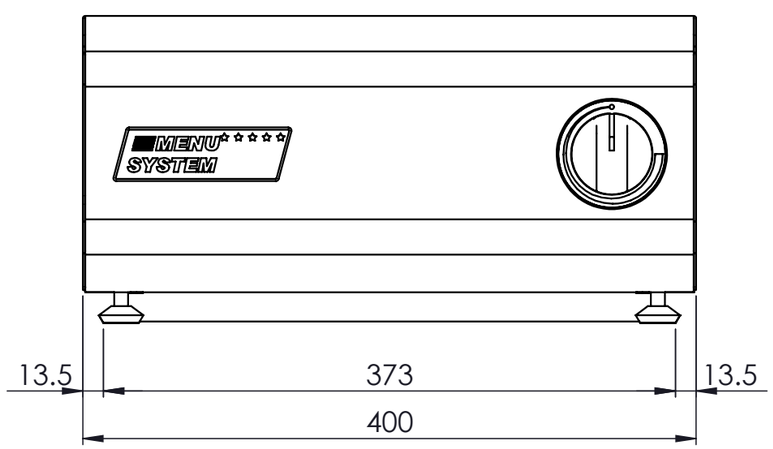


| | | | | | |
|---|---|---|---|---|---|
| Ohne separate Stückliste | X | Format | A3 | Gezeichnet | 20.04.2010 | M.Allenspach |
| Sep. Stückliste gleicher Nr. | | Massstab | 1:4 | Geprüft | | |
| Sep. Stückliste anderer Nr. | | Ges.-Gewicht | 28.81 kg | Aussendienst | | |
| Laserteilesatz | | Kommission | | | | |

Allgemeintoleranz SN EN 22768-1-m

MENU SYSTEM ★★★★★
THE FINE ART OF COOKING

Benennung 1
MS-1-10 ECO CEE16/15CEE7/7
3,5 kW coil, 230V 1 phase 60/60Hz
Benennung 2
Auftischgerät-I, 400x400x200
Benennung 3

Artikel-Nr.
311681-

Zeichnungs-Nr.
311681- 00

Copyright ©MENU SYSTEM AG, CH-9014 St.Gallen
Diese Zeichnung darf ohne unsere Genehmigung weder vervielfältigt noch dritten Personen überlassen werden.

Blatt-Nr. 2 | Anz. Blätter 2